integration with integrity

User's Manual

5_1/4" Embedded Controller 3308010

Version 1.1, August 2007

Copyrights

This manual is copyrighted and all rights are reserved. It does not allow any non authorization in copied, photocopied, translated or reproduced to any electronic or machine readable form in whole or in part without prior written consent from the manufacturer.

In general, the manufacturer will not be liable for any direct, indirect, special, incidental or consequential damages arising from the use of inability to use the product or documentation, even if advised of the possibility of such damages. The manufacturer keeps the rights in the subject to change the contents of this manual without prior notices in order to improve the function design, performance, quality and reliability. The author assumes no responsibility for any errors or omissions, which may appear in this manual, nor does it make a commitment to update the information contained herein.

Trademarks

Intel is a registered trademark of Intel Corporation.
Award is a registered trademark of Award Software, Inc.

All other trademarks, products and or product's name mentioned herein are mentioned for identification purposes only, and may be trademarks and/or registered trademarks of their respective companies or owners.

Contents

1. Introduction 6

1.1 Specifications 7

1.2 What You Have 9

2. Installation 10

2.1 3308010 Layout 10

2.2 3308010 Dimensions (Unit: mm) 12

2.3 Unpacking Precautions 13

2.4 Clear CMOS Setup 13

2.5 Buzzer Function Setting 14

2.6 COM2 RS-232 /422/485 Mode Selection 14

2.7 TFT LCD Setting 15

2.8 PCI Slot VIO Voltage Setting 15

2.9 Serial port's Pin9 Function Setting 15

2.10 Compact Flash Master/Slave Mode Setting 16

3. Connection 17

3.1 Audio Connectors 17

3.2 PCI E-IDE Disk Drive Connector 18

3.3 Parallel Port 19

3.4 USB Port Connectors 19

3.5 Serial Port 20
3.6 Keyboard / Mouse Connector 21
3.7 IrDA Infrared Interface Port 21
3.8 Fan Connector 22
3.9 VGA Connector 22
3.10 TV OUT Connector 22
3.11 Digital I / O Connector 23
3.12 Power Connector 23
3.13 External Switches and Indicators 24
3.14 PS-ON Connector 24
3.15 LAN Connector 25
3.16 RS422 / 485 Connector 25
3.17 TFT LCD Connector 25
3.18 LCD Connector 26
3.19 PCI Slot 27
3.20 PC / 104-Plus Connector 29
3.21 Floppy Connector 33

Appendix A: Watchdog Timer 34

Appendix B: I/O Address Map 36

Appendix C: How to use Wake-Up Function ... 38

Appendix D: Digital I/O 39

Appendix E: Signal mapping of LVDS 41

Appendix F: ATX Power Supply 43

1. Introduction

Thank you for choosing 3308010 embedded board. 3308010 is a 5”1/4 form factor CPU board equipped with a low power consumption and high performance Intel processor. It is designed for system manufacturers, integrators, or VARs who want to provide quality and reliable CPU board at a reasonable price.

3308010 has a built-in the ProSavage4 AGP4X VGA controller. It is a 2D/3D graphics controller, which provides resolution up to 1920x1440, and supports both CRT and LCD. The VGA controller can share 8-32MB frame buffer of system memory.

For applications requiring a high-speed serial transmission, 3308010 provides both USB 1.1 and USB 2.0. The high speed USB 2.0 host controller implements an ECHI interface that provides 480Mb/s bandwidth.

Both on-chip UARTs are compatible with the NS16C550. The parallel port and IDE interface are compatible with IBM PC/AT architecture.

3308010 also has a built-in 10/100 Fast Ethernet LAN, which is a fully integrated 10BASE-T/100BASE-TX LAN controller with high performance and low power consumption features.

3308010 uses the advanced VIA VT8606/VT82C686B Chipsets, which is 100% software compatible chipset with PCI 2.2 standard.

1.1 Specifications

CPU	INTEL Low Power Processor
Bus interface	PCI/ISA bus
PCI Slot	32 bit PCI expansion slot (Rev. 2.1)
DMA channels	7
Interrupt levels	15
Chipset	VT8606/VT82C686B
Main memory	One 168-pin DIMM socket supports 133Mhz SDRAM. The maximum memory is up to 512MB.
Ultra DMA 100 IDE interface	Up to four IDE hard drives are supported. The Ultra DMA 100 IDE can handle data transfer up to 100MB/s. Compatible with existing ATA IDE specifications.
Floppy disk drive interface	Supports up to two floppy disk drives, 5.25" (360KB and 1.2MB) and/or 3.5" (720KB, 1.44MB, and 2.88MB).
Serial ports	Four RS-232 ports with 16C550 UART (or compatible) with 16-byte FIFO buffer. Support up to 115.2Kbps. The ports can be individually configured to COM1, COM2, COM3, COM4 or disabled.
Bi-directional parallel port	Configurable to LPT1, LPT2, LPT3 or disabled. Supports EPP/ECP/SPP.
Hardware monitor	Built-in to monitor power supply voltage and fan speed status.
IrDA port	Supports Serial Infrared (SIR) and Amplitude Shift Keyed IR (ASKIR) interface.
USB ports	Supports 4 USB2.0 and 2 USB1.1 ports.
Watchdog timer	Software programmable, reset generated when watchdog timer is time-out.
VGA controller	Built-in ProSavage4 AGP4X 256-bit 2D/3D graphics engine. 8-32MB share Memory. Screen Resolution: up to 1920x1440.

Ethernet	Fast Ethernet controllers, IEEE 802.3u Auto-Negotiation supports 10BASE-T/100BASE-TX standard. Two RJ-45 connectors are provided.
Keyboard and PS/2 mouse	A 6-pin mini DIN connector is located on the edge of the board that can be connected to a keyboard or PS/2 mouse. For alternative application, a keyboard and a PS/2 mouse pin header connector are also available on board.
Audio	AC'97 Audio CODEC
Compact flash	It can be used with a passive adapter (True IDE Mode) in a Type I/II Socket.
Expansion Socket	PC/104-Plus compatible (PCI and ISA)
Power consumption	+5V @ 3A, +12V @ 700mA, +5VSB @ 600mA
Operating temperature	0°-60° C

1.2 What You Have

3308010's package includes the following items:

- User Manual
- 3308010 Embedded Board
- Four RS-232 cables
- One Parallel port cable
- One FDD cable
- Two ATA IDE cables
- One Audio cable
- One USB cable
- One VGA cable
- Keyboard and mouse Y-Adapter cable.
- One Driver CD

If any of these items is missing or damaged, contact the dealer from whom you purchased this product. Save the shipping materials and carton in case you want to ship or store the product in the future.

2. Installation

This chapter describes how to install 3308010. Follow the unpacking information carefully and refer to the following diagram of 3308010 when necessary.

2.1 3308010 Layout

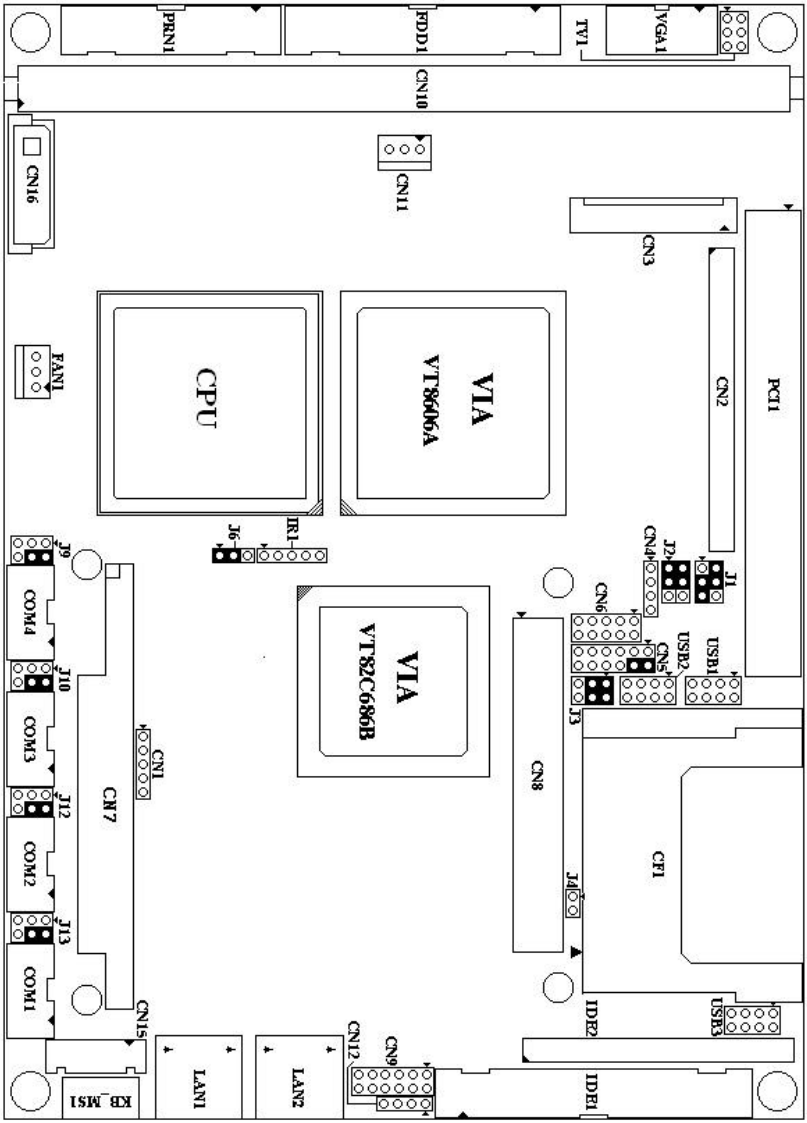
PRN1
FDD1
TV1
VGA1
CN10
CN16
CN11
CN3
CPU
VIA
VT8606A
FAN1
CN2
PCI1
J6
IR1
J9
COM4
J10
COM3
J12
COM2
J13
COM1
CN7
CN1
VIA
VT82C686B
CN4
J2
J1
CN6
CN5
USB2
USB1
J3
CN8
CF1
J4
CN15
LAN1
LAN2
CN12
CN9
IDE2
USB3
IDE1
KB_MS1

2.2 3308010 Dimensions (Unit: mm)

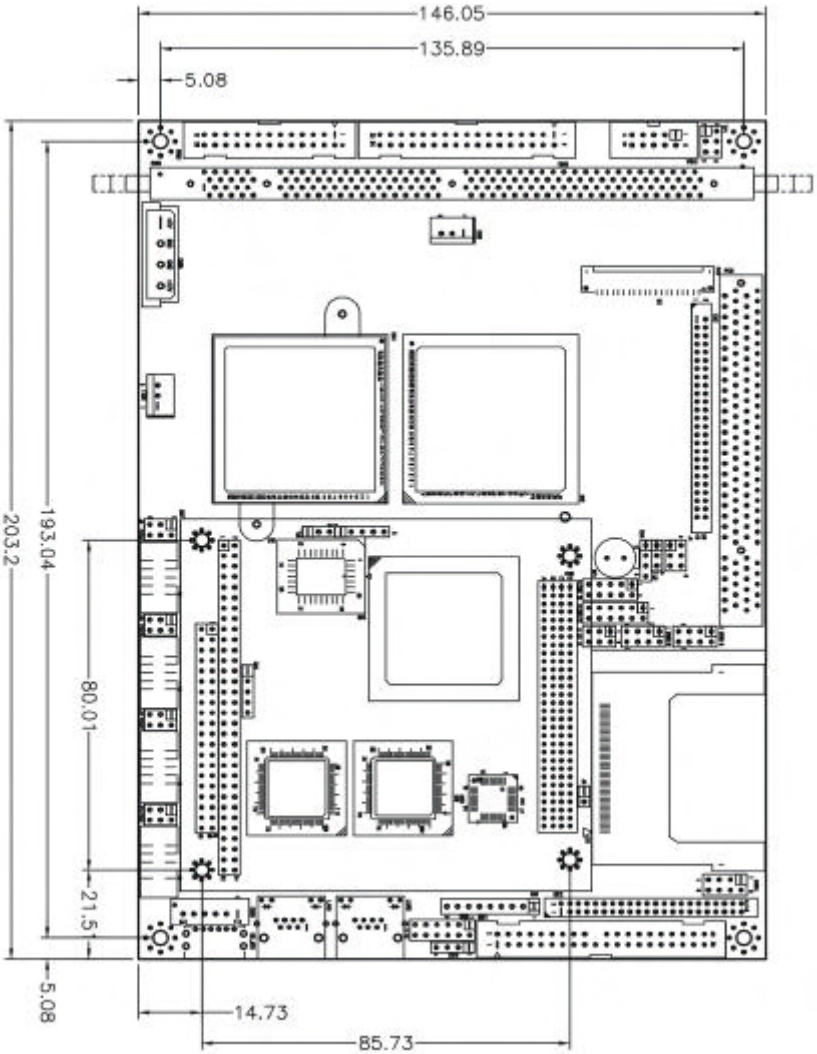

2.3 Unpacking Precautions

Some components of 3308010 are very sensitive to static electricity and can be damaged by a sudden rush of power. To protect it from unintended damage, be sure to follow these precautions:

- Ground yourself to remove any static charge before touching 3308010. You can do it by using a wrist strap connected to the ground or by frequently touching any conducting materials connected to the ground.
- Handle your 3308010 by its edges. Do not touch IC chips, leads or circuitry.
- Do not plug any connector or jumper when the power is on.

2.4 Clear CMOS Setup

To clear the CMOS Setup (for example, if you have forgotten the password, you should clear the CMOS and then re-set the password), you have to close the J6 (2-3) for about 3 seconds, and then open it. This will put the system back to normal operation mode.

- **J6: Clear CMOS Setup**

J6	Description
1-2 (default)*	Keep CMOS Setup (Normal Operation)
2-3	Clear CMOS Setup

**Note: All shaded rows in the tables of this manual are the default settings for the 3308010.*

2.5 Buzzer Function Setting

- **CN5 (2-4): Enabled / Disabled Onboard Buzzer Function**

2 – 4	Description
SHORT	Enabled
OPEN	Disabled

2.6 COM2 RS-232 / 422 / 485 Mode Selection

- **J2: COM2 Mode Selection**

J2	Description
1-3 Short	RS232
3-5, 2-4 Short	RS422
3-5, 4-6 Short	RS485

Note: If RS422/485 is in use, the RS232 mode on the main board will be disabled.

2.7 TFT LCD Setting

• J1: LCD type (5V/3V & FPCLK/#FPCLK) Setting

J1	Description
2 – 4	3V TFT LCD
3 – 5	FPCLK
4 – 6	5V TFT LCD
1 – 3	#FPCLK

2.8 PCI Slot VIO Voltage Setting

• J3: VIO Voltage (5V/3V) Setting

J3	Description
1 - 3	5VIO
2 - 4	5VIO
3 - 5	3VIO
4 - 6	3VIO

2.9 Serial port's Pin9 Function Setting

To set the function for Pin9 of serial ports (COM1, 2, 3, 4).

· J9, J10, J12, J13: Pin9 Function Setting

J9, J10, J12, J13	Description
2 – 4	Normal RI Function
1 – 3 4 – 6	5 Voltage output
3 – 5 4 – 6	12 Voltage output

2.10 Compact Flash Master/Slave Mode Setting

- **J4: Compact Flash Master/Slave Mode Setting**

J4	Description
Close	Master
Open	Slave

3. Connection

This chapter describes how to connect peripherals, switches and indicators to the 3308010 board.

3.1 Audio Connectors

The onboard AC'97 CODEC supports several audio functions. The audio connectors are described below.

- **CN9: Audio connector (Speaker out, Line out, Line in, MIC in)**

PIN	Description	PIN	Description
1	Speaker out (Left)	2	Speaker Out (Right)
3	GROUND	4	GROUND
5	Line Out (Left)	6	Line Out (Right)
7	Line In (Left)	8	Line In (Right)
9	GROUND	10	GROUND
11	MIC In	12	GROUND

- **CN12: Audio CD In connector**

PIN	Description
1	CD SIGNAL (LEFT)
2	GROUND
3	GROUND
4	CD SIGNAL (RIGHT)

3.2 PCI E-IDE Disk Drive Connector

You can attach up to four IDE (Integrated Device Electronics) devices.

IDE1: Primary IDE Connector (40pin 2.54mm)
IDE2: Secondary IDE Connector (44pin 2.0mm)

- **IDE1 & IDE2: IDE Interface Connector**

PIN	Description	PIN	Description
1	RESET#	2	GROUND
3	DATA 7	4	DATA 8
5	DATA 6	6	DATA 9
7	DATA 5	8	DATA 10
9	DATA 4	10	DATA 11
11	DATA 3	12	DATA 12
13	DATA 2	14	DATA 13
15	DATA 1	16	DATA 14
17	DATA 0	18	DATA 15
19	GROUND	20	N/C
21	DRQ	22	GROUND
23	IOW#	24	GROUND
25	IOR#	26	GROUND
27	CHRDY	28	(PULL LOW TO GND)
29	DACK	30	GROUND
31	INTERRUPT	32	N/C
33	SA1	34	N/C
35	SA0	36	SA2
37	HDC CS0#	38	HDC CS1#
39	HDD ACTIVE#	40	GROUND
41	+5V(IDE2)	42	+5V(IDE2)
43	GND (IDE2)	44	N/C (IDE2)

3.3 Parallel Port

Usually, a printer is connected to the parallel port. 3308010 includes an on-board parallel port, accessed via a 26-pin flat-cable.

- **PRN1: Parallel Port Connector**

PIN	Description	PIN	Description
1	STROBE#	2	DATA 0
3	DATA 1	4	DATA 2
5	DATA 3	6	DATA 4
7	DATA 5	8	DATA 6
9	DATA 7	10	ACKNOWLEDGE
11	BUSY	12	PAPER EMPTY
13	PRINTER SELECT	14	AUTO FORM FEED #
15	ERROR#	16	INITIALIZE
17	PRINTER SELECT LN#	18	GROUND
19	GROUND	20	GROUND
21	GROUND	22	GROUND
23	GROUND	24	GROUND
25	GROUND	26	NC

3.4 USB Port Connectors

3308010 is equipped with two USB 2.0 ports with high bandwidth (480Mbps) and is backward compatible with USB1.1.

- **USB1, USB2: USB 2.0 Connectors (2 ports each)**

PIN	Description	PIN	Description
1.	VCC	8.	GROUND
2.	DATA0-	7.	DATA1+

3.	DATA0+	6.	DATA1-
4.	GROUND	5.	VCC

3308010 is also equipped with two USB 1.1 ports.

- **USB3: USB 1.1 Connector (2 ports)**

PIN	Description	PIN	Description
1.	VCC	8.	GROUND
2.	DATA0-	7.	DATA1+
3.	DATA0+	6.	DATA1-
4.	GROUND	5.	VCC

3.5 Serial Port

3308010 offers four high-speed NS16C550 compatible UARTs with 16-byte Read/Receive FIFO serial ports.

- **COM1, COM2, COM3, COM4: Serial Port Connectors**

PIN	Description
1	DATA CARRIER DETECT (DCD)
2	RECEIVE DATA (RXD)
3	TRANSMIT DATA (TXD)
4	DATA TERMINAL READY (DTR)
5	GROUND (GND)
6	DATA SET READY (DSR)
7	REQUEST TO SEND (RTS)
8	CLEAR TO SEND (CTS)
9	RING INDICATOR (RI)

3.6 Keyboard / Mouse Connector

3308010 has a 6-pin DIN keyboard/mouse connector and a 5-pin keyboard connector.

- **KB_MS1: Keyboard / Mouse Connector**

PIN	Description
1	KEYBOARD DATA
2	MOUSE DATA
3	GROUND
4	+5V
5	KEYBOARD CLOCK
6	MOUSE CLOCK

- **CN15: 6-pin Keyboard / Mouse Connector**

PIN	Description
1	+5V
2	MOUSE DATA
3	MOUSE CLOCK
4	KEYBOARD DATA
5	KEYBOARD CLOCK
6	GROUND

3.7 IrDA Infrared Interface Port

3308010 comes with an integrated IrDA port, which supports either a Serial Infrared (SIR) or an Amplitude Shift Keyed IR (ASKIR) interface.

- **IR1: IrDA connector**

PIN	Description
1	VCC
2	IR-RX2
3	IR-RX
4	Ground
5	IR-TX

3.8 Fan Connector

3308010 also has a CPU cooling fan connector, which can supply 12V/500mA to the fan. There is a rotation pin in the fan connector, which transfers the fan's rotation signal to the system BIOS in order to recognize the fan speed. Please note that only specific fans offer a rotation signal.

- **FAN1: CPU Fan Connector**

PIN	Description
1	Rotation Signal
2	+12V
3	Ground

3.9 VGA Connector

- **VGA1: 10-pin VGA Connector**

PIN	Description	PIN	Description
1	RED	6	DDCCLK
2	GREEN	7	DDCDAT
3	BLUE	8	GROUND
4	HSYNC	9	GROUND
5	VSYNC	10	GROUND

3.10 TV OUT Connector

3308010 supports both NTSC and PAL signal on the TV-out.

- **TV1: 6-pin TV-OUT Connector**

PIN	Description	PIN	Description
1	GROUND	2	TV_Y
3	GROUND	4	TV_C
5	GROUND	6	TV_CVBS

3.11 Digital I/O Connector

The digital IO port of 3308010 is 5V CMOS level. Internal pull-up is existed on the output.

- **CN6: 10-pin Digital I/O Connector**
  (Please refer to Appendix D for used digital I/O function)

PIN	Description	PIN	Description
1	GROUND	2	+5V
3	INPUT1	4	OUTPUT1
5	INPUT2	6	OUTPUT2
7	INPUT3	8	OUTPUT3
9	INPUT4	10	OUTPUT4

3.12 Power Connector

3308010 is equipped with one 4-pin power connector.

- **CN16: Power Connector**

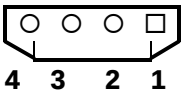

PIN	Description
1	+5V
2	GND
3	GND
4	+12V

3.13 External Switches and Indicators

There are several external switches and indicators for monitoring and controlling your CPU board. All functions are in the CN5 connector.

•CN5: Pin Assignment and Functions

FUNCTION	PIN	Description	
SPEAKER	2	SPK SIGNAL	Jump for Buzzer
	4	Buzzer-	
	6	NC	
	8	VCC	
RESET	10	RESET	
	12	GROUND	
HDD LED	9	IDE_LED+	
	11	IDE_LED-	
POWER LED	1	LED+	
	3	LED- (GROUND)	
POWER BUTTON	5	GROUND	
	7	PWR-BTN	

3.14 PS-ON Connector

This connector is used to control the on/off of ATX power supply.

- **CN11: PS-ON Connector (Please refer to Appendix F for used with ATX power supply)**

PIN	Description
1	+5V Standby
2	PS-ON
3	Ground

3.15 LAN Connector

3308010 is equipped with two 10/100Mbps Ethernet controllers, which are connected to the LAN via RJ45 connectors. The pin assignments are as follows.

- **LAN1, LAN2: LAN Connectors (RJ-45)**

PIN	Description	PIN	Description
1	TX+	7	N/C
2	TX-	8	N/C
3	RX+	9	Speed +
4	N/C	10	Speed -
5	N/C	11	Active/LINK +
6	RX-	12	Active/LINK -

3.16 RS422 / 485 Connector

The RS485 port of 3308010 is half-duplex with auto direction. So you do not have to switch transfer mode while sending or receiving the data.

- **CN4: RS422/485 Connector**

PIN	Description
1	TX+
2	TX-
3	RX+
4	RX-

3.17 TFT LCD Connector

3308010 is equipped with TFT LCD controller, which can be connected to the LCD via CN2

connector. The pin assignments are as follows.

- **CN2: TFT LCD Connector**

PIN	Description	PIN	Description
1	N/C	2	FP33
3	FP34	4	FP31
5	FP35	6	FP32
7	FP30	8	FP28
9	FP29	10	FP27
11	FP25	12	FP26
13	FP24	14	FP21
15	FP23	16	FP22
17	FP16	18	FP20
19	FP17	20	FP18
21	FP19	22	FP14
23	FP13	24	FP12
25	FP15	26	FP11
27	FP7	28	FP10
29	+LCD	30	+LCD
31	FP9	32	FP8
33	FP4	34	FP6
35	FP3	36	FP5
37	FP2	38	FP1
39	FPDEN	40	FP0
41	FPCLK	42	VEEON
43	ENVDD	44	FPVS
45	ENVEE	46	FPHS
47	GND	48	GND
49	+12V	50	+12V

3.18 LCD Connector

3308010 can support 1 or 2 channel (18 or 36bit) LVDS panel, which can be connected to CN3. The pin assignments are as follows.

- **CN3: LVDS LCD Connector**

PIN	Description	PIN	Description
1	2nd LVDS clock output +	2	2nd LVDS clock output -
3	2nd LVDS data2 output +	4	2nd LVDS data2 output -
5	2nd LVDS data1 output +	6	2nd LVDS data1 output -
7	2nd LVDS data0 output +	8	2nd LVDS data0 output -
9	1st LVDS clock output +	10	1st LVDS clock output -
11	1st LVDS data2 output +	12	1st LVDS data2 output -
13	1st LVDS data1 output +	14	1st LVDS data1 output -
15	1st LVDS data0 output +	16	1st LVDS data0 output -
17	GROUND	18	GROUND
19	+LCD (+3Vor +5V)	20	+LCD (+3Vor +5V)

Please refer to Appendix E for the signal mapping of LVDS.

3.19 PCI Slot

- **PCI 1: PCI Slot**

PIN	Description	PIN	Description
1	NC	2	NC
3	+12V	4	NC
5	NC	6	GND
7	NC	8	NC
9	+5V	10	+5V

11	INTD-	12	+5V
13	INTB-	14	INTA-
15	+5V	16	INTC-
17	NC	18	PRSNT
19	+5V	20	NC
21	NC	22	PRSNT
23	GND	24	GND
25	GND	26	GND
27	NC	28	NC
29	PCIRST-	30	GND
31	+5V	32	PCICLK
33	GNT-	34	GND
35	GND	36	REQ-
37	NC	38	+5V
39	AD30	40	AD31
41	+3V	42	AD29
43	AD28	44	GND
45	AD26	46	AD27
47	GND	48	AD25
49	AD24	50	+3V
51	IDSEL	52	CBE3-
53	+3V	54	AD23
55	AD22	56	GND
57	AD20	58	AD21
59	GND	60	AD19
61	AD18	62	+3V
63	AD16	64	AD17
65	+3V	66	CBE2-
67	FRAME-	68	GND
69	GND	70	IRDY-
71	TRDY-	72	+3V
73	GND	74	DEVSEL-
75	STOP-	76	GND
77	+3V	78	LOCK-
79	SDONE	80	PERR-
81	SBO-	82	+3V

83	GND	84	SERR-
85	PAR	86	+3V
87	AD15	88	CBE1-
89	+3V	90	AD14
91	AD13	92	GND
93	AD11	94	AD12
95	GND	96	AD10
97	AD9	98	GND
99	CBE0	100	AD8
101	+3V	102	AD7
103	AD6	104	+3V
105	AD4	106	AD5
107	GND	108	AD3
109	AD2	110	GND
111	AD0	112	AD1
113	+5V	114	+5V
115	REQ64-	116	ACK64-
117	+5V	118	+5V
119	+5V	120	+5V

3.20 PC/104-Plus Connector

3308010 has a PC/104-Plus connector for both PC/104-Plus and PC/104 modules. The PCI bus of PC/104-Plus is a 32-bit bus running at 33MHz, and it is PCI2.1 compliant.

• CN8: PC/104-Plus PCI Connector (120-pin PCI bus)

PIN	Description	PIN	Description
A1	NC	B1	NC
A2	NC	B2	AD2
A3	AD5	B3	GND
A4	CBE0-	B4	AD7
A5	GND	B5	AD9

A6	AD11	B6	NC
A7	AD14	B7	AD13
A8	NC	B8	CBE1-
A9	SERR-	B9	GND
A10	GND	B10	PERR-
A11	STOP-	B11	NC
A12	NC	B12	TRDY-
A13	FRAME-	B13	GND
A14	GND	B14	AD16
A15	AD18	B15	NC
A16	AD21	B16	AD20
A17	NC	B17	AD23
A18	IDSEL0	B18	GND
A19	AD24	B19	CBE3-
A20	GND	B20	AD26
A21	AD29	B21	+5V
A22	+5V	B22	AD30
A23	REQ0-	B23	GND
A24	GND	B24	REQ2-
A25	GNT1-	B25	NC
A26	+5V	B26	PCICLK0
A27	PCICLK2	B27	+5V
A28	GND	B28	INTD-
A29	+12V	B29	INTA-
A30	NC	B30	REQ3-

PIN	Description	PIN	Description
C1	+5V	D1	AD0
C2	AD1	D2	+5V
C3	AD4	D3	AD3
C4	GND	D4	AD6
C5	AD8	D5	GND
C6	AD10	D6	NC
C7	GND	D7	AD12
C8	AD15	D8	NC

C9	SBO-	D9	PAR
C10	NC	D10	SDONE
C11	LOCK-	D11	GND
C12	GND	D12	DEVSEL-
C13	IRDY-	D13	NC
C14	NC	D14	CBE2-
C15	AD17	D15	GND
C16	GND	D16	AD19
C17	AD22	D17	NC
C18	IDSEL1-	D18	IDSEL2
C19	NC	D19	IDSEL3
C20	AD25	D20	GND
C21	AD28	D21	AD27
C22	GND	D22	AD31
C23	REQ1-	D23	NC
C24	+5V	D24	GNT0-
C25	GNT2-	D25	GND
C26	GND	D26	PCICLK1
C27	PCICLK3	D27	GND
C28	+5V	D28	PCIRST-
C29	INTB-	D29	INTC-
C30	GNT3-	D30	NC

- **CN7: PC/104 Connector (104-pin ISA bus)**

PIN	Description	PIN	Description
A1	IOCHK-	B1	GND
A2	SD7	B2	RSTDRV
A3	SD6	B3	+5V
A4	SD5	B4	IRQ9
A5	SD4	B5	NC
A6	SD3	B6	DREQ2
A7	SD2	B7	NC
A8	SD1	B8	ZWS-
A9	SD0	B9	+12V

A10	IOCHRDY	B10	GND
A11	AEN	B11	SMEMW-
A12	SA19	B12	SMEMR-
A13	SA18	B13	IOW-
A14	SA17	B14	IOR-
A15	SA16	B15	DACK3-
A16	SA15	B16	DREQ3
A17	SA14	B17	DACK1-
A18	SA13	B18	DREQ1
A19	SA12	B19	REFRESH-
A20	SA11	B20	ISACLK
A21	SA10	B21	IRQ7
A22	SA9	B22	IRQ6
A23	SA8	B23	IRQ5
A24	SA7	B24	IRQ4
A25	SA6	B25	IRQ3
A26	SA5	B26	DACK2-
A27	SA4	B27	TC
A28	SA3	B28	BALE
A29	SA2	B29	+5V
A30	SA1	B30	ISA_OSC
A31	SA0	B31	GND
A32	GND	B32	GND

PIN	Description	PIN	Description
C1	GND	D1	GND
C2	SBHE-	D2	MCS16-
C3	SA23	D3	IOCS16-
C4	SA22	D4	IRQ10
C5	SA21	D5	IRQ11
C6	SA20	D6	IRQ12
C7	SA19	D7	IRQ15
C8	SA18	D8	IRQ14
C9	SA17	D9	DACK0-
C10	MEMR-	D10	DREQ0

C11	MEMW-	D11	DACK5-
C12	SD8	D12	DRREQ5
C13	SD9	D13	DACK6-
C14	SD10	D14	DREQ6
C15	SD11	D15	DACK7-
C16	SD12	D16	DREQ7
C17	SD13	D17	+5V
C18	SD14	D18	MASTER-
C19	SD15	D19	GND
C20	NC	D20	GND

3.21 Floppy Connector

- **FDD1: Floppy Connector**

PIN	Description	PIN	Description
1	GROUND	2	RWC0-
3	GROUND	4	NC
5	GROUND	6	RWC1-
7	GROUND	8	INDEX-
9	GROUND	10	MO-A
11	GROUND	12	DS-B
13	GROUND	14	DS-A
15	GROUND	16	MO-B
17	GROUND	18	DIR-
19	GROUND	20	STEP-
21	GROUND	22	WD-
23	GROUND	24	WGATE-
25	GROUND	26	TRK0-
27	GROUND	28	WP-
29	GROUND	30	RDATA-
31	GROUND	32	HEAD-
33	GROUND	34	DSKCHG-

Appendix A: Watchdog Timer

The Watchdog Timer is a device to ensure that standalone systems can always recover from abnormal conditions that cause the system to crash. These conditions may result from an external EMI or a software bug. When the system stops working, hardware on the board will perform hardware reset (cold boot) to bring the system back to a known state.
Three I/O ports control the operation of Watchdog Timer.

443 (hex)	Write	Set Watchdog Time period
443 (hex)	Read	Enable the Watchdog Timer
043/843 (hex)	Read	Disable the Watchdog Timer

Prior to enable the Watchdog Timer, user has to set the time-out period. The resolution of the timer is 1 second and the range of the timer is from 1 sec to 255 sec. You need to send the time-out value to the I/O port–443H, and then enable it by reading data from the same I/O port–443H. This will activate the timer that will eventually time out and reset the CPU board. To ensure that this reset condition will not occur, the Watchdog Timer must be periodically refreshed by reading the same I/O port 443H. This must be done within the time-out period that is set by the software, please refer to the example program. Finally, we have to disable the Watchdog timer by reading the I/O port– 843H or 043H. Otherwise the system could reset unconditionally.

A tolerance of at least 5% must be maintained to avoid unknown routines in the operating system (DOS), such as disk I/O that can be very time-consuming. For example, if the time-out period has been set to 10 seconds, the I/O port 443H must be read within 7 seconds.

Example assembly program:

```
TIMER_PORT   =  443H
TIMER_START  =  443H
TIMER_STOP   =  843H

;;INITIAL TIMER COUNTER

MOV DX, TIMER_PORT
MOV AL, 8     ;;8 seconds
OUT DX, AL
MOV DX, TIMER_START
IN AL, DX.    ;;START COUNTER

W_LOOP:
MOV DX, TIMER_STOP
IN AL, DX
MOV DX, TIMER_START
IN AL, DX        ;;RESTART COUNTER

;;ADD YOUR APPLICATION HERE

CMP EXIT_AP, 0
JNE W_LOOP
MOV DX, TIMER_STOP
IN AL, DX

;;EXIT AP
```

Appendix B: I/O Address Map

I/O Address Map

I/O Address	Description
000-01F	DMA Controller #1
020-021	Interrupt Controller # 1, Master
040-05F	System Timer
060-06F	Standard 101/102 keyboard Controller
070-07F	Real time Clock, NMI Controller
080-0BF	DMA Page Register
0A0-0BF	Interrupt Controller # 2
0C0-0DF	DMA Controller # 2
0F0-0F0	Clear Math Coprocessor Busy
0F1-0F1	Reset Math Coprocessor
0F8-OFF	Math Coprocessor
170-1F7	BUS Master PCI IDE Controller
278-27F	Parallel Printer Port 2
2E8-2EF	Serial Port 4
2F8-2FF	Serial Port 2
376-376	BUS Master PCI IDE Controller
378-37F	Parallel Printer Port 1
3B0-3DF	AGP Graphic Adapter
3E8-3EF	Serial Port 3
3F0-3F7	Floppy Disk Controller
3F8-3FF	Serial Port 1
443	Watchdog timer enable
480-48F	PCI BUS
843/043	Watchdog timer disable

1st MB Memory Address Map

Memory address	Description
00000-9FFFF	SYSTEM MEMORY
A0000-BFFFF	VGA BUFFER
C0000-CFFFF	VGA BIOS
E0000-FFFFF	SYSTEM BIOS
100000	EXTEND MEMORY

IRQ Mapping Chart

IRQ0	System Timer	IRQ8	RTC CMOS clock
IRQ1	Keyboard	IRQ9	ACPI STEERING
IRQ2	IRQ Controller	IRQ10	COM4
IRQ3	COM2	IRQ11	COM3
IRQ4	COM1	IRQ12	PS/2 mouse
IRQ5	USB	IRQ13	FPU
IRQ6	FDC	IRQ14	Primary IDE
IRQ7	Printer	IRQ15	Secondary IDE

DMA Channel Assignment

Channel	**Function**
0	Available
1	Available
2	Floppy disk
3	Available
4	Cascade for DMA controller 1
5	Available
6	Available
7	Available

Appendix C: How to use Wake-Up Function

3308010 provides two kinds of Wake-up function. This page describes how to use Modem Wake-Up and LAN Wake-Up functions. Wake-Up function only works with ATX power supply.

Wake-Up On Modem(Ring):
You must set the option **Wake-Up On LAN/Ring** of CMOS SETUP to be enabled. ATX power supply will be switched on when there is a ring signal detected on pin "RI" of serial port.

Wake-Up On LAN:
When your computer is in power-down status, you can see LAN Link/Active LED is flashing. This status indicates that the LAN chip has entered standby mode and waits for Wake-Up signal. You can use other computers to wake up yours by sending ID to it.

ID: ID is the MAC address of your system LAN. Every LAN chip has a factory-set ID, which you can find it from network information in WINDOWS.

ID's format is xxxxxxxxxxxx
Example ID: 009027388320

Appendix D: Digital I/O

One characteristic of digital circuit is its fast response to high or low signal. This kind of response is highly needed for harsh and critical industrial operating environment. That's why we design 4-bit digital inputs and 4-bit digital outputs on the 3308010.

There are two kinds of signals (Input and Output) used by the Digital I/O function. These signals are for the control of external devices that need On/Off circuit. When one of the signals has been selected, the user can read or write data to the system through the Digital I/O.

BIOS function call -- INT 15H is used to control the digital I/O:

INT 15H

AH – 6FH
Sub-function:
AL – 8 : Set the Digital port as INPUT
AL : Digital I/O input value

Example program:

```
MOV    AX, 6F08H          ;setting the Digital port is input
INT    15H                ;
```

;;AL low byte = value

AH – 6FH
Sub-function:
AL – 9 : Set the Digital port as OUTPUT
BL : Digital I/O output value

Example program:

```
MOV     AX, 6F09H          ;setting the Digital port is output
MOV     BL, 09H            ;Digital value is 09H
INT      15H                ;
```

Digital Output is 1001b

Appendix E: Signal mapping of LVDS

18bit LVDS mapping table

<table>
<tr><td>(R0)</td><td rowspan="7">1st LVDS
(data0 output-)
(data0 output +)</td><td>(B2)</td><td rowspan="7">1st LVDS
(data2 output -)
(data2 output +)</td></tr>
<tr><td>(R1)</td><td>(B3)</td></tr>
<tr><td>(R2)</td><td>(B4)</td></tr>
<tr><td>(R3)</td><td>(B5)</td></tr>
<tr><td>(R4)</td><td>HSYNC</td></tr>
<tr><td>(R5)</td><td>VSYNC</td></tr>
<tr><td>(G0)</td><td>DE</td></tr>
<tr><td>(G1)</td><td rowspan="7">1st LVDS
(data1 output -)
(data1 output +)</td><td rowspan="7">DCLK</td><td rowspan="7">1st LVDS
(clock output -)
(clock output +)</td></tr>
<tr><td>(G2)</td></tr>
<tr><td>(G3)</td></tr>
<tr><td>(G4)</td></tr>
<tr><td>(G5)</td></tr>
<tr><td>(B0)</td></tr>
<tr><td>(B1)</td></tr>
</table>

36bit LVDS mapping table

<table>
<tr><td>(RA0)</td><td rowspan="7">1st LVDS
(data0 output -)
(data0 output +)</td><td>(BA2)</td><td rowspan="7">1st LVDS
(data2 output -)
(data2 output +)</td></tr>
<tr><td>(RA1)</td><td>(BA3)</td></tr>
<tr><td>(RA2)</td><td>(BA4)</td></tr>
<tr><td>(RA3)</td><td>(BA5)</td></tr>
<tr><td>(RA4)</td><td>HSYNC</td></tr>
<tr><td>(RA5)</td><td>VSYNC</td></tr>
<tr><td>(GA0)</td><td>DE</td></tr>
<tr><td>(GA1)</td><td rowspan="7">1st LVDS
(data1 output -)
(data1 output +)</td><td rowspan="7">DCLKA</td><td rowspan="7">1st LVDS
(clock output -)
(clock output +)</td></tr>
<tr><td>(GA2)</td></tr>
<tr><td>(GA3)</td></tr>
<tr><td>(GA4)</td></tr>
<tr><td>(GA5)</td></tr>
<tr><td>(BA0)</td></tr>
<tr><td>(BA1)</td></tr>
</table>

(RB0)	2nd LVDS (data0 output -) (data0 output +)	(BB2)	2nd LVDS (data2 output -) (data2 output +)
(RB1)		(BB3)	
(RB2)		(BB4)	
(RB3)		(BB5)	
(RB4)		NC	
(RB5)		NC	
(GB0)		NC	
(GB1)	2nd LVDS (data1 output -) (data1 output +)	DCLKB	2nd LVDS (clock output -) (clock output +)
(GB2)			
(GB3)			
(GB4)			
(GB5)			
(BB0)			
(BB1)			

Appendix F: ATX Power Supply

The following notes show how to connect ATX Power Supply to the CPU board.

1. Disconnect the AC cord of the Power Supply from the AC source to prevent sudden electric surge to the board.

3308010 (through Power Button & GND):

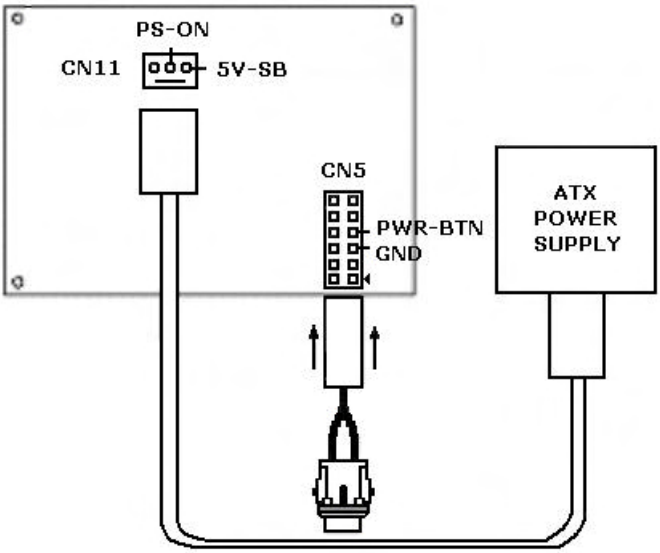

2.Connect the power button to the PIN 5,7 of CN5. And connect the power cable from ATX Power supply to CN11 on CPU card. CN16 also has to be provided with 5V and 12V.

If you want to turn on the system, just press the button once. And if you want to turn off the power supply, please press the ATX power switch button for about 4 seconds.

Any advice or comments about our products and service, or anything we can help you with please don't hesitate to contact us. We will do our best to support your products, projects and business.

Address: Global American, Inc.
17 Hampshire Drive
Hudson, NH 03051

Telephone: Toll Free (U.S. Only) 800-833-8999
(603)886-3900

FAX: (603)886-4545

Website: http://www.globalamericaninc.com
E-Mail: salesinfo@globalamericaninc.com